INSTRUCTION MANUAL

FOR

UNIVERSAL CENTRIFUGE

Z 323
Z 323 K

Labnet International
PO Box 841
Woodbridge, NJ 07095

Phone: (732) 417-0700
Fax: (732) 417-1750

INDEX **Page**

1. General Information

1.1 Precautions and hazards 4
1.2 Description 5
1.3 Do not operate the centrifuge under the following conditions 5
1.4 Safety standards 5
1.5 Technical data 6
1.6 Accessories supplied with each centrifuge unit 7
1.7 Warranty 7

2. Installation

2.1 Unpacking the centrifuge 7
2.2 Required space 7
2.3 Installation 8

3. How to install and load a rotor

3.1 Mounting and securing a swing out rotor 8
3.2 Mounting and securing an angle rotor 9
3.3 Mounting and securing a hematocrit rotor 10
3.4 Overloading rotors 11
3.5 Removing the rotor 11

4. Operation

4.1 Power switch 12
4.2 Lid release 12
4.3 Lid lock 12
4.4 Preselection of speed / RCF 13
4.5 Preselection of operating time 14
4.6 Adjustment of the radius correction 15
4.7 Preselection of brake intensity 16
4.8 Preselection of temperature and pre-cooling 17
4.9 Keyboard - Starting the centrifuge - "quick"-key 18
4.10 "Stop" key 18
4.11 Program memory 18

5. Safety facilities

5.1 Imbalance 20

6. Service and Maintenance

6.1 Service and inspection of the centrifuge 21
6.2 Cleaning the centrifuge 21
6.3 Cleaning the centrifuge after breakage of glass tubes/bottles 22
6.4 Disinfection 22

7. Breakdown

7.1 Emergency lid release 22
7.2 Check list / Troubleshooting 23-27

1. General Information

1.1 Precautions and hazards

Before putting the centrifuge into operation, please read this instruction manual carefully.

The centrifuge must not be operated by unqualified persons not familiar with the correct use and intended purpose of the machine.
Please use only the original spare parts!
For personal and environmental safety, pay special attention to the following precautions:

The Hermle Z 323K is neither explosion proof nor inert gas shielded and should therefore never be operated in explosive-hazardous locations.
Never stay in the safety zone of 30 cm around the centrifuge or deposit dangerous goods inside this zone during centrifugation.
The centrifugation of flammable, explosive or radioactive samples is not allowed.
Do not spin samples which can chemically react with each other when exposed to air.
Never spin toxical or pathological material without adequate safety precautions i.e. centrifuging of buckets/tubes without or with defective hermetic sealing is not allowed.
The end user should perform appropriate disinfection procedures in case dangerous goods have contaminated the centrifuge or its accessories.
The general universal laboratory precautions should be observed in case infectious materials are centrifuged. If necessary, please contact a health safety officer!
It is prohibited to run the centrifuge with rotors not suited for this centrifuge model.
Under no circumstances, should the centrifuge lid be opened while the rotor is still turning (running with a speed of more than 2 meters per second).

The following rules must be strictly adhered to:

Do not operate the centrifuge if it is not installed correctly.
Never operate the centrifuge in a disassembled state (e.g. without sheet metal cover)
Do not run the centrifuge if electrical or mechanical systems have been tampered with by unauthorized persons.
Never use accessories such as rotors and buckets which are not exclusively approved by **Hermle Labortechnik GmbH or Labnet International**, except commercially available centrifuge tubes of glass or plastic.
Do not spin corrosive samples which may cause damage to the centrifuge and impair the mechanic resistance.
Never operate the centrifuge with rotors or buckets which show any signs of corrosion or mechanical damage

The manufacturer is only responsible for the security and reliability of the centrifuge if:
The unit is operated according to the instruction manual.
Modifications, repairs and new adjustments are performed by HERMLE or Labnet authorized persons and the electrical installation of the location where the centrifuge is operated corresponds to the IEC-regulations.

1.2 Description

Model Z323K is a refrigerated, universal centrifuge which covers many fields of applications by offering a wide range of accessories.

15 different rotors are available. From a swing out rotor for 4 x 100 ml to several high capacity fixed angle rotors (for example: 6 x 85 ml with a max. speed of 13500 rpm, 20,980 x g).

Also available is a rotor for microtitre plates and several micro rotors for microcentrifuge tubes.

1.3 Do not operate the centrifuge if:

- The unit is not installed correctly.
- The unit is partly dismantled.
- The unit was serviced by non-authorized or non-qualified personnel.
- The rotor is not installed securely on the motor shaft.
- When rotors or accessories will be used which are not authorized for this unit by Hermle or Labnet.
  Exception: commercially available tubes or bottles made of glass or plastic which are designed for centrifugation.
- The unit is in explosive atmospheres.
- Combustible or explosive samples are used.
- Samples are used which can mix and chemically react with each other.

1.4 Safety standards

The centrifuge corresponds to the general requirements set by German law for medical apparatus, "MedGV" group 3.

The following standards have been considered for the production of our centrifuges:

- Accident prevention rules for centrifuges, UVV-VBG 7z.
- Accident prevention rules for cooling systems, UVV-VBG 20.
- Accident prevention rules for electrical equipment & installations, UVV-VBG 4.
- International Standard IEC 1010-1 and 1010-2-D
- European Standard PR EN 61010-1 and PR EN 61010-2-2
- Electrical interference suppression according to interference degree B as per VDE 0871.

1.5 Technical Data

Manufacturer	Hermle Labortechnik GmbH	
Type	Z 323 K	
Dimensions: Width Depth Height	 69 cm 55 cm 37 cm	
Weight	79 kg	
Noise level	66 dB(A)	
Max. speed Max. volume Max. RCF Admiss. density Admiss. kinetic energy	17.000 rpm 510 ml 26,810 x g 1.2 kg/dm³ 31997 Nm	
Electrical connection AC Current Connected load	230 V/50-60 Hz 11 A 1380 W	120 V/60 Hz 12 A 1380 W
Cooling	CFC-free	
Interference suppression	VDE 0871, interference degree B	
Service dept. at Labnet	(732) 417 - 0700	
Address of service:	National Labnet Company 162 Fernwood Ave. Edison, NJ 08837	

1.6 Accessories supplied with each centrifuge unit

2 Fine-wire fuses 15 AT, 1 Instruction manual, 1 Tool for removing the rotor

1.7 Warranty

The centrifuge has been subjected to thorough testing and quality control during the production process. In the unlikely event of any manufacturing faults occuring, the centrifuge and rotors are covered by the warranty for a period of one year from date of delivery. **Please keep all packing materials, pallets and boxes in storage for a period of 1 year for warranty purposes.** This warranty becomes invalid in case of improper operation, use of non-appropriate spare parts or accessories and non-authorized modification of rotor or centrifuge.

The manufacturer reserves the right for any technical modifications of the product in respect to technical improvement.

2. Installation

2.1 Unpacking the centrifuge

The Z 323K is supplied in a carton on a pallet. Remove the tightening straps and the nails with which the carton is fixed to the pallet. Open the carton and remove the corrugated cardboard inserts, then gently lift centrifuge from carton. **Caution: unit is heavy, suggest using 2 people to lift.** The instruction manual and the accessories mentioned under 1.6 should be kept with the centrifuge. **Please keep all packaging in safe storage for at least 1 year for warranty purposes.**

2.2 Transport

To prevent damage, avoid impacts during transportation and do not drop the unit.

2.3 Required space

The centrifuge should be installed on a rigid, even surface. The Z 323K centrifuge should only be operated on a stable laboratory table/cabinet etc..
Balance the centrifuge with a spirit level.
To guarantee the necessary heat dissipation, the unit must be situated so that there is a space of at least 15 cm on each side of the unit.
Never place the centrifuge in an area subject to excessive heat, e.g., strong sunlight, as the performance of the unit is based upon an ambient temperature of +23°C.

Attention:
New safety standards require a safety margin space of 30 cm around the centrifuge. Mark this area to indicate that no personnel and/or dangerous materials (e.g. flammable or infectious liquids) should be kept outside of this area during operation.

2.3 Installation

Check that:

- The power supply corresponds to that on the manufacturer's rating label which is mounted on the rear panel, then connect the power cord to the centrifuge and the socket.
- The line voltage circuit breaker has a maximum of 16 Amp. type K slow release for commonly used instruments.
- An ermergency switch is installed outside the room to disconnect the power supply in case of a troubled run
- The power switch is at the rear side of the unit. Switch it on.
- The digital indications on the display are lighting up.
- Press "lid" key. You can open the centrifuge lid now (see page 9).

3. How to install and load a rotor

3.1 Mounting and securing a swing out rotor:

Clean the motor shaft, as well as the rotor mounting hole with a piece of cloth and place the rotor on the motor shaft ensuring that the pins align correctly with the rotor slots. Hold the rotor with one hand and secure the rotor to the shaft by turning the rotor nut counter-clockwise.

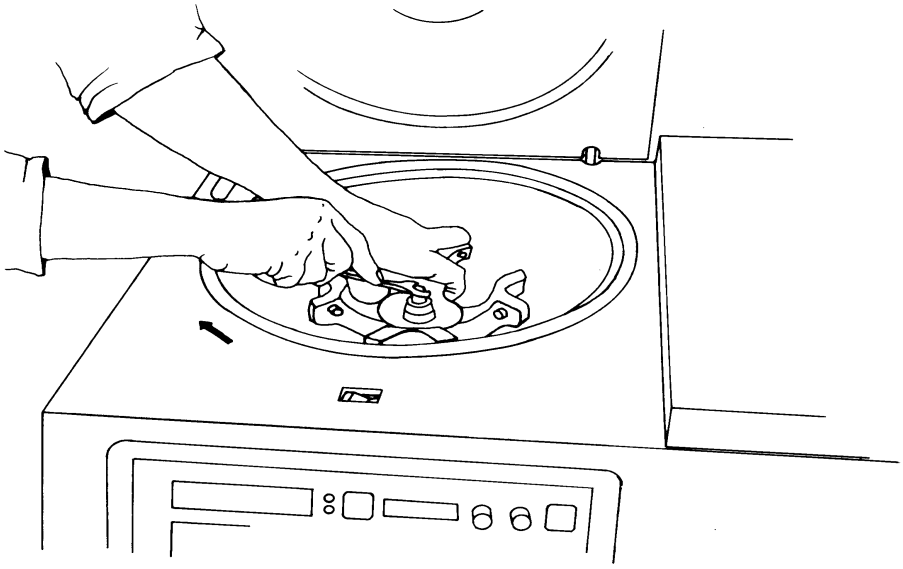

Figure 1

When loading the buckets and tube racks you should proceed according to Figure 2a and 2b. It is very important to load the rotor with the complete set of buckets/tube racks. **The bucket insert bolts of the rotor should be lubricated regularly with silicone grease.** Fill the tubes equally by eye-measuring and insert them into the tube-holes, and/or tube racks. The difference in weight between the buckets should not exceed 10 grams.

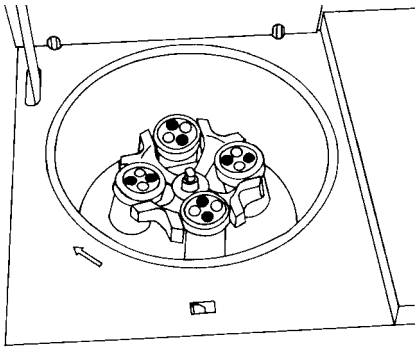

Figure 2a
Correct

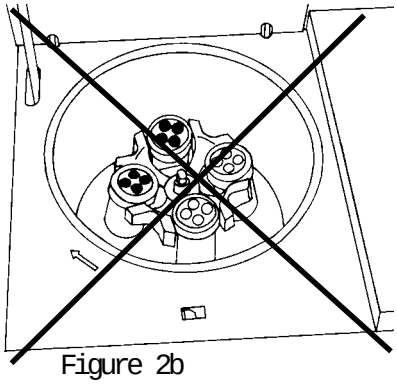

Figure 2b
Incorrect

Rotor must always be balanced regardless of the number of samples used. For example a 4-place swing out rotor with 2 loaded and 2 unloaded buckets, must have the loaded buckets placed opposite each other.

3.2 Mounting and securing an angle rotor

Clean the motor shaft, as well as the rotor mounting hole with a piece of cloth and place the rotor on the motor shaft ensuring that the pins align correctly with the rotor slots (see figure 3a and 3b).

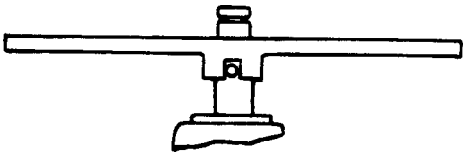

Figure 3a

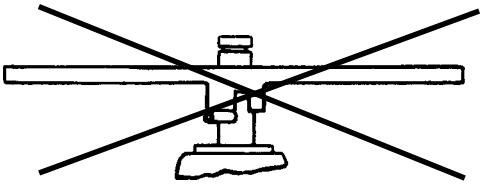

Figure 3b

Hold the rotor with one hand and secure the rotor to the shaft by turning the rotor nut (1) counter-clockwise (see figure 4).

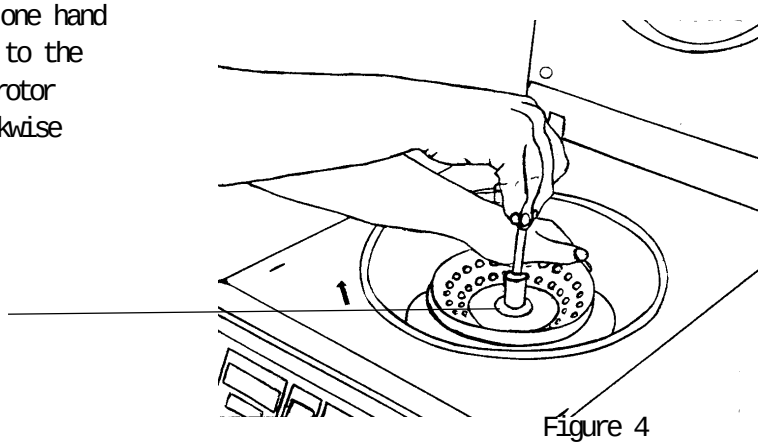

Figure 4

ATTENTION !

Before operating, secure the rotor lid to the rotor by pressing the snap connector on the rotor nut.
Load the rotor according to Figure 5a.

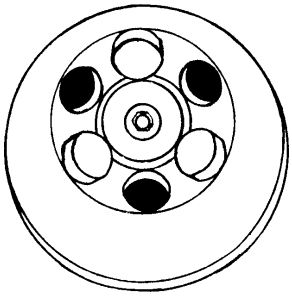

Figure 5a
Correct

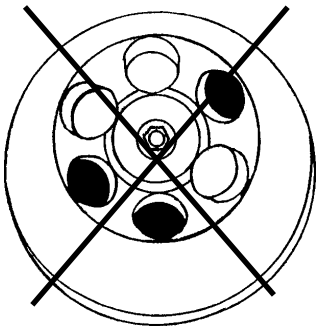

Figure 5b
Incorrect

Load the rotor symmetrically by inserting tubes
(see figure 5a and 5b).
Fill the tubes equally by eye-measuring and insert them into the tube-holes of the rotor.
The difference in weight between the tubes should not exceed 2 - 3 grams.

3.3 Mounting and securing a hematocrit rotor

Clean the motor shaft and the rotor mounting hole with a piece of cloth and place the rotor on the motor shaft ensuring that the pins align correctly with the rotor slots (see page 7)

Hold the rotor with one hand and secure the rotor to the shaft by turning the rotor nut counter-clockwise
(see figure 7).

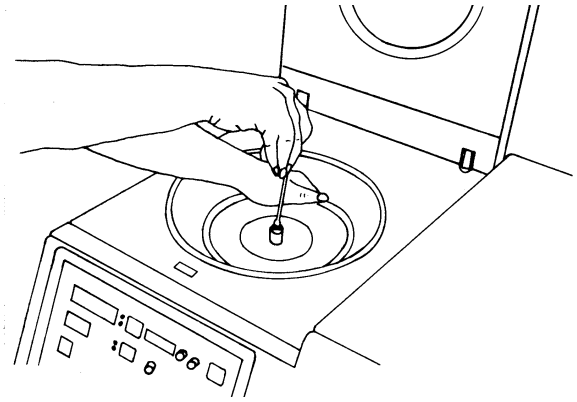

Figure 7

When loading the rotor, make sure that the sealing is in good condition. The sealing should not be brittle, dirty or damaged by the capillaries. If necessary replace the sealing.

To remove or to close the rotor lid of the hematocrit rotor, press both locking bolts together.

3.4 Overloading the rotor

The max. load permitted for a rotor, which is determined by the manufacturer, as well as the max. speed allowed with the rotor (see indications on the rotor itself) must not be exceeded.

The liquids with which the rotors are loaded should have an average homogeneous density of 1.2 g per ml or less, when the rotor is running at maximum speed.

To spin liquids of a higher density, the speed should be reduced according to the following formula:

Reduced speed $$n_{red} = \sqrt{\frac{1{,}2}{\text{higher density value}}} \times \text{max. speed } (n_{max})$$

Example: $$n_{red} = \sqrt{\frac{1{,}2}{1{,}7}} \times 4000 = 3360 \text{ rpm}$$

In case of any questions please contact National Labnet!

3.5 Removing the rotor

Take off the rotor lid and hold the rotor with one hand.
Turn the rotor nut clockwise, until the rotor is loose and take the rotor vertically off the shaft.

ATTENTION:

Never operate the centrifuge with rotors or buckets which show any signs of corrosion or mechanical damage.

Never operate with strongly corrosive materials which could damage the rotor and buckets.

4 Operation

4.1 Power switch

You can switch on the centrifuge with the main switch on the back of the unit. The digital display will light up when the power is on.

4.2 Lid release

The green control lamp of the "lid" key lights(when the rotor is stationary and the lid is closed correctly).

Press the "lid" key to open the lid. After pressing, the lid will open automatically (this will take approx. 6 seconds) and during this time "OPEN" appears on the actual speed display. The indication "OPEN" will extinguish as soon as the lid is opened.

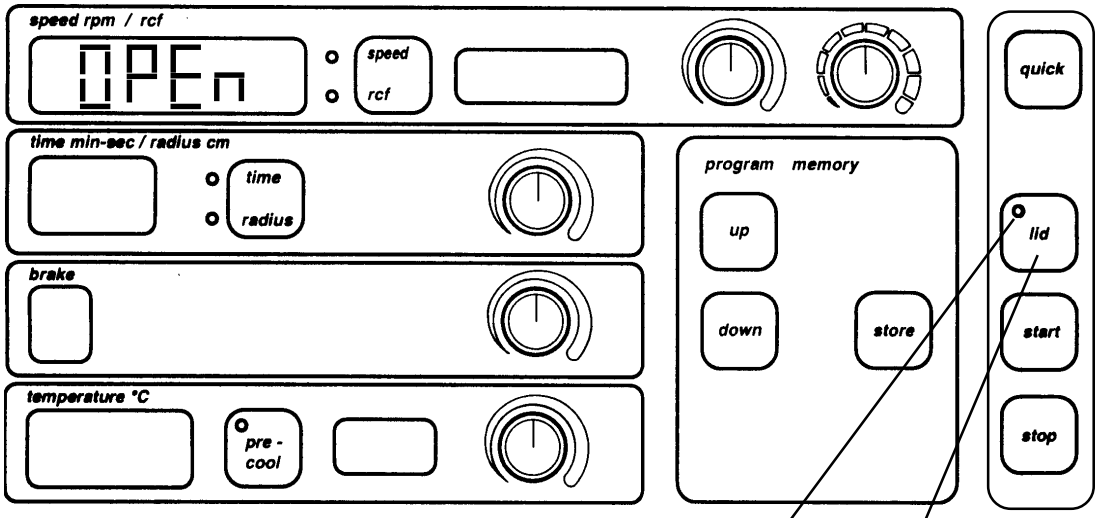

Control lamp (rotor is stationary):
Shows that the lid is closed correctly.

"Lid" key:
To open the centrifuge lid

4.3 Lid lock

After correct fitting, loading and fixing of the rotor close the lid as described below.

Close the lid by using a small amount of pressure until the lid system locks. This will take approx 6 seconds and during this time the indication "CLOSE" appears on the actual display. The indication "CLOSE" will extinguish as soon as the lid is closed correctly.
When the LED on the "LID" key lights, the centrifuge can be started .

4.4 Preselection of speed / RCF

You have the choice between preselection of speed or RCF.

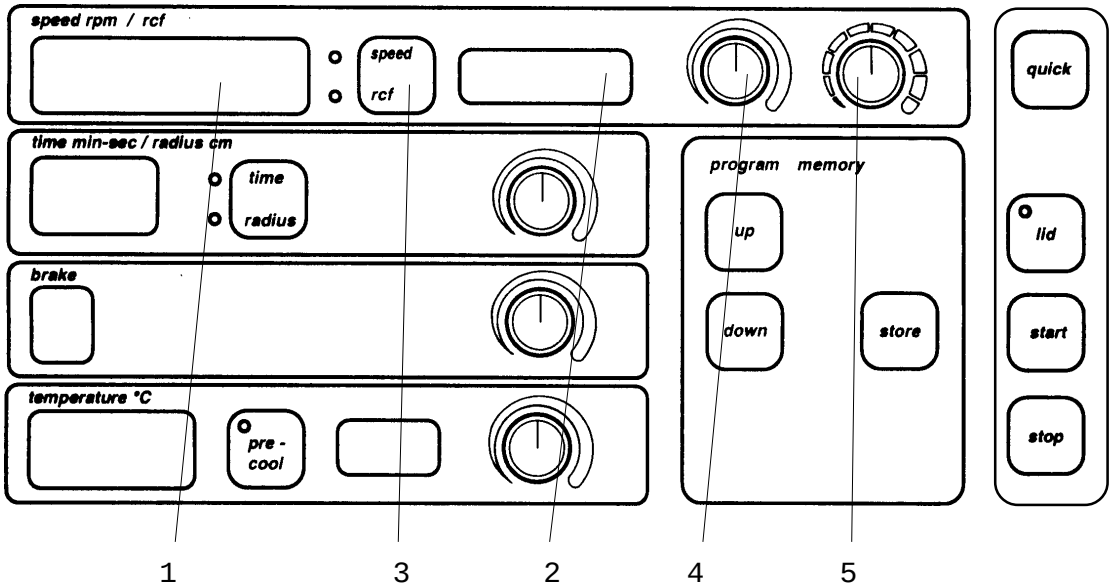

Figure 9

With the "speed/rcf" key(3) you can choose either the "speed" or "rcf" mode.
The green LED display shows which mode is activated. Select the desired mode.
With the turn knob (4) you can preselect the speed/rcf in steps of 500 rpm or correct the preset speed/rcf during the run.
With the turn knob 5 you can preselect the speed/rcf in steps of 10 rpm or correct the preset speed/rcf during the run.
The preset value will be indicated on the preset display (2).
The actual speed will be indicated on the actual display (1).
The preset speed/rcf should not be higher than the max. allowed speed/rcf of the inserted rotor.
If the preset speed/rcf is too high, the preset display (2) of the speed/rcf will flash (see figure 9).
The centrifuge will accelerate only to the max. allowed speed of the inserted rotor.

Labnet Rotor#	Hermle Rotor#	Maximum Speed
C0252-84 & C0252-84F	220.84V01 & V02	6000rpm
C0252-82	220.82V01	6000rpm
C0252-85	220.85V01	13500rpm
C0252-89	220.89V01	12500rpm
C0382-78	220.78V02	13500rpm
C0382-91	220.80V02	13500rpm

Labnet Rotor#	Hermle Rotor#	Maximum Speed
C0252-59	220.59V06	13500rpm
C0252-9 & C0252-55	220.88V01	13500rpm
C0252-87	220.87V01	17000rpm
C0252-43	220.92V01	13500rpm
C0323-72 & C0323-71	220.72V04	5000rpm
C0382-50	220.50V05	3500rpm

4.5 Preselection of operating time

With the turn knob (3) you can adjust the desired operating time between 1 and 60 minutes. The operating time you set will appear on the digital display (1).
At the end of a run the preset operating time will be kept for further runs.
For continuous runs turn the "time/radius" knob clockwise to the stop limit. The continuous run will be indicated on the digital display with two minus signs "--".
You can stop a continuous run with "stop" key.

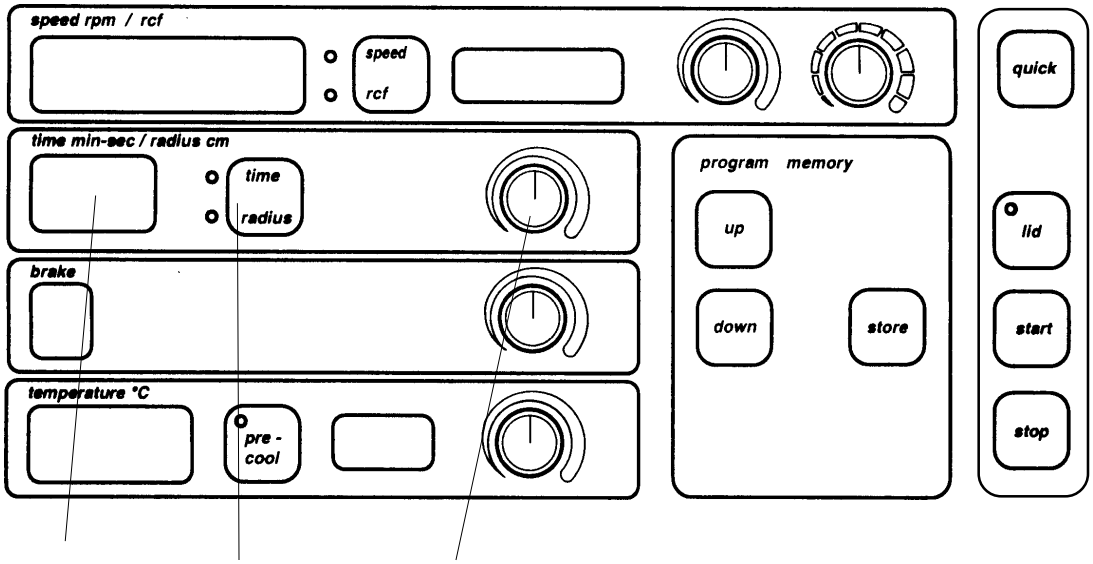

Figure 10

4.6 Adjustment of radius correction (important for accurate rcf value indication)

Explanation:

The rotor identification sensor is passing on the information to the centrifuge control which rotor is inserted in the centrifuge. Therefore the centrifuge control knows the specific max. centrifuging radius. If you run the centrifuge with tube racks or adapters the centrifuge radius may be reduced. If a radius correction factor is not entered, the centrifuge will not indicate the correct rcf value.

Preselection:

In the following chart the corresponding radius correction values for all rotor types, tube racks and adapters are listed. Use the required radius correction values from this chart.

Press down "time/radius" key(2) and hold it (see figure 10). Choose with the adjustment knob (3) the required radius correction value which will be indicated on the digital display (1). Release "time/radius" key (2) and the digital display (1) will show the preset operating time. The preset radius correction value can be checked at any time by pressing "time/radius" key(2).

Radius Correction Values		
Rotor # and Description	Adapter #	Radius Correction Value
C0252-59 / (220.59V06)	C1205	0.7 cm
Micro Rotor 24 x 2.0/1.5ml	C1206	0.0 cm
Max Radius: 8.5cm	C1222	1.7 cm
	C0233-6	0.0 cm
	C0233-7	0.7 cm
C0252-9 / (220.88V01)	C1205	0.7 cm
Micro Rotor 44 x 2.0/1.5ml	C1206	0.0 cm
Max Radius: 8.4cm	C1222	1.7 cm
C0300-96 / (220.96V02)	C0230-19	1.1 cm
Angle Rotor 12 x 15ml	C0230-17	2.0 cm
Conical/Round tubes	C0230-20	3.6 cm
Max Radius: 10.4cm	C0200-10	1.1 cm
C0300-97 / (220.97V02)	C0232-8	0.1 cm
Angle Rotor 6 x 50ml	C0232-8A	0.1 cm
Max Radius: 9.6cm	C0232-9	0.3 cm
C0252-85 / (220.85V01)	C0252-85A	0.5 cm
Angle Rotor 12 x 12ml		
Max Radius: 9.8cm		
C0323-72 / (220.72V04)	C0320-721	0.2 cm
Swing-out Rotor 4 x 100ml	C0320-730	0.2 cm
Max Radius: 14cm	C0320-725	0.2 cm
	C0320-728	0.2 cm
	C0320-726	0.0 cm
	C0320-724	0.2 cm
	C0320-727	0.1 cm
	C0320-722	0.2 cm
	C0320-720	0.2 cm
	C0320-729	0.2 cm
C0382-78	C0360-94J	0.1 cm
Angle Rotor 6 x 85ml	C0360-94C	0.6 cm
R-max: 10.3cm	C0360-94B	0.8 cm
	C0360-94A	0.3 cm
	C0360-94D	0.6 cm
	C0364-91Y	0.6 cm
C0382-91	C0364-91Y	0.5 cm
Angle Rotor 8 x 50ml	C0360-91C	0.7 cm
R-max: 9.5cm	C0360-91A	0.4 cm
	C0364-91D	0.5 cm
C0382-76	C0360-76C	0.3 cm
Angle Rotor 8 x 30ml	C0360-76A	0.3 cm
R-max: 9.4cm		
C0382-81	C0230-20	5.9 cm
Angle Rotor 24 x 15ml	C0230-19	2.8 cm
R-max: 14.6cm	C0230-17	3.0 cm

4.7 Preselection of brake intensity

To reduce the risk of resuspending samples during deceleration, it is possible to preselect the brake intensity with the "brake" adjustment knob (1), (10 intensity levels), see figure 11.

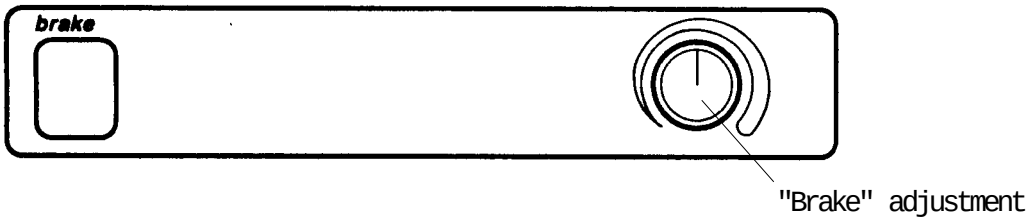

Figure 11

The following chart shows the minimum and maximum deceleration times of the different rotors.

Rotor		Deceleration Time in Seconds		Acceleration Time
Labnet#	Hermle#	Intensity "9"	Intensity "0"	In seconds
C0252-59	220.59V06	20	163	15
C0252-9	220.88V01	22	154	20
C0252-87	220.87V01	27	177	24
C0252-43	220.92V01	20	154	17
C0252-84	220.84V01	20	125	16
C0252-84F	220.84V02	20	125	16
C0252-82	220.82V01	22	158	19
C0252-89	220.89V01	18	138	14
C0323-72C	220.72V04	40	143	29
C0382-50	220.50V05	20	90	23
C0382-78	220.78V02	80	545	80
C0382-91	220.80V02	50	362	50
C0382-76	220.76V02	49	362	55
C0323-81	220.81V05	20	103	32

4.8 Preselection of temperature and pre-cooling

Pre-cooling:

To avoid considerable temperature deviations at the beginning of an operation at low temperatures, pre-cool the centrifuge together with the rotor before insertion of the samples.

Please proceed as under:

1) Insert the required rotor together with the buckets into the centrifuge. Secure the rotor to the shaft.
2) Set the desired sample temperature and close the centrifuge lid.
3) Press the "precool" key. The centrifuge starts accelerating up to the most suitable precool-speed. The preset temperature will be reached in a few minutes.
4) Press the "stop" key to finish the "precool" function.
5) After the rotor has stopped, you can open the centrifuge lid and insert your samples. Close the centrifuge lid and start the centrifuge either by pressing the "start" key or from the program memory.

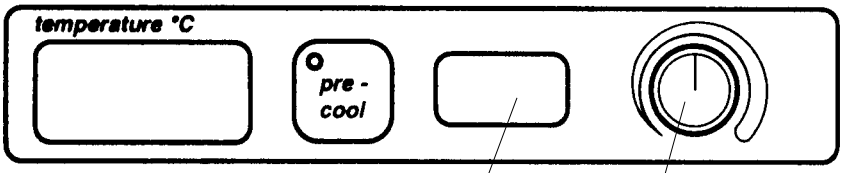

Figure 12 2 1

The desired sample temperature can be pre-selected from -10°C up to +40°C with the adjustment knob (1). The preset value will be indicated on the preset display (2).

The lowest temperatures that can be reached at maximum speed with the corresponding rotors can be taken from the following chart.

Lowest Temperature Z 323K		
Preselection of temperature - 10 °C		
Rotor #	**Speed**	**Temperature (±1°C)**
C0252-59 / (220.59 V06)	13 500 rpm	-7°C
C0252-9 / (220.88 V01)	13 500 rpm	-7°C
C0252-87 / (220.87V01)	17 000 rpm	-1°C
C0252-43 / (220.92 V01)	13 500 rpm	-5°C
C0252-84 / (220.84 V01)	6 000 rpm	-10°C
C0252-84F / (220.84 V02)	6 000 rpm	-10°C
C0252-82 / (220.82 V01)	6 000 rpm	-10°C
C0252-85 / (220.85 V01)	13 500 rpm	-1°C
C0252-89 / (220.89 V01)	12 000 rpm	-10°C
C0323-71 & C0323-72 / (220.72 V04)	5 000 rpm	-10°C
C0382-50 / (220.50 V05)	3 500 rpm	-10°C
C0382-78 / (220.78 V02)	13 500 rpm	-5°C
C0382-91 / (220.80 V02)	13 500 rpm	-1°C
C0382-76 / (220.76 V02)	13 500 rpm	0°C
C0323-81 / (220.81V05)	3 500 rpm	-10°C

4.9 Keyboard - Starting the centrifuge - "quick"-key

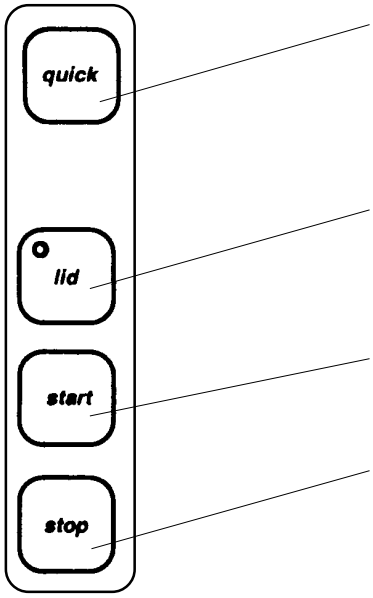

1 "Quick" key: for short time runs.

2 "Lid" key: to open the centrifuge lid. If the green LED of the "lid" key is lit the lid is closed correctly.

3 "Start" key: to start the centrifuge.

4 "Stop" key: to stop the centrifuge before the preset operating time has expired or to stop the centrifuge at a continuous run.

Figure 13

Starting the centrifuge

The rotor has to be fixed correctly and completely loaded (see point 3). Close the centrifuge lid. As soon as the green LED of the key "lid" is lit the centrifuge can be started. Then press the "start" key.

"quick" - key - Short time runs

For short centrifuge runs you can start the run with the "quick" key. Press the "quick" key. The centrifuge starts and keeps running as long as you press the "quick"-key. The operating time will be indicated in seconds on the digital "time" display.

4.10 "Stop" key

Press the "stop" key if you want to interrupt a centrifuge run. The centrifuge decelerates according to the adjusted brake intensity. You can change the brake intensity during deceleration.

4.11 Program memory (10 places)

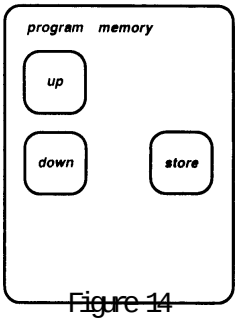

Figure 14

"Up" key: to recall a program and to count upwards the storage place numbers.

"Store" key: to store a program and to leave the program memory.

"Down" key: to recall a program and to count downwards the storage place numbers.

Storage of a run:

Place the rotor into the centrifuge. The rotor has to be secured to the motor shaft and correctly loaded. Close the centrifuge lid.
Preset the required running parameters, for example speed and running time.
Press the "start" key. You can store the run as soon as the large speed display indicates more than 200 rpm.
Press the "up" or "down" key. The program number will be indicated on the left by 0-9 on the large speed display. Press the "up" or "down" key so many times, till the required storage place number is displayed.
Touch the "store" key very shortly. On the large digital speed display on the right the rotor type of the corresponding program will be indicated (see figure 15). If rotor type "0" is displayed, the storage place number is not occupied.
To store a program, you have to press the "store" key for about **3 seconds** till the large digital speed display is no longer flashing.
The centrifuge run is stored.

Recall a program (centrifuge run):

Press the "up" or "down" key. On the large digital speed display the program number will be displayed on the left side and the rotor number on the right.

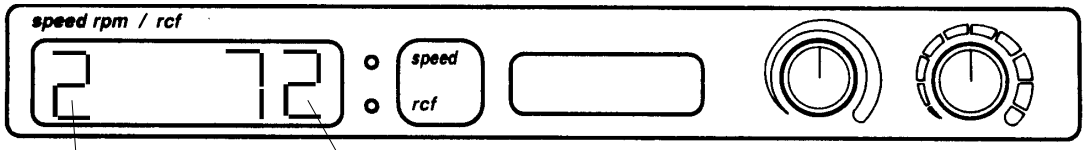

Program number Rotor type (C0323-72C) Figure 15

Choose the required program number with the "up" or "down" key.
Insert the rotor into the centrifuge which is indicated on the right of the large speed display. Secure the rotor to the motor shaft and make sure that the rotor is loaded correctly. Close the centrifuge lid and press the "start" key. The unit is in the program mode now.
You can stop a program mode at any time by pressing the "stop" key.
The turn knobs are out of function during a program run.

Leaving the program:

The centrifuge is in the program mode and shows program and rotor number on the large speed display. Open the centrifuge lid. **Press the "store" key for about 3 seconds**. As soon as the program and rotor number disappears on the large speed display, the unit left the program mode. The centrifuge can be operated regularly again.

5. Temperature Features

5.1 Temperature regulation

The temperature regulation sensor, refrigeration system and processor control system is programmed so the adjusted temperature is reached within the shortest possible time. This time depends on room temperature, temperature preselection, type of rotor and speed. During this regulation time deviations on the temperature display above or below the adjusted temperature may occur.
Never the less, the rotor as well as samples get cooled continously at the fixed value (see picture 1).

If you are working with temperature sensitive samples a pre-cooling of the rotor, buckets and racks at the corresponding temperature is necessary
(see pre-cooling 4.8.)

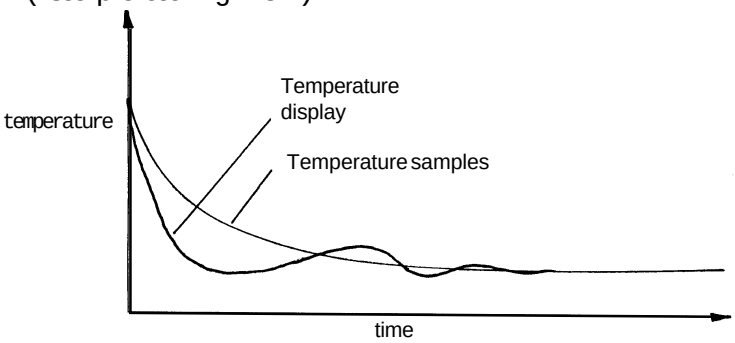

6. Safety facilities

6.1 Imbalance

In case of unequal loading of opposite buckets/tube racks or tube-holes, the operation will be interrupted during the acceleration phase. The rotor will be decelerated to a standstill. Also, the message "ERROR" appears on the preset "speed" display.

If the actual "speed" display shows error no. 1, the difference in weight of the samples are too big. Fill the tubes and load the rotor as described under point 3.

If the actual "speed" display shows error no. 2, there can be several reasons:
- The imbalance switch is not adjusted correctly.
- The imbalance switch is defective.

6.2 Overtemperature

The overtemperature control system protects your samples as well as the centrifuge. If the temperature in the rotor chamber of the centrifuge exceeds +50°C the preset "speed" display will indicate "ERROR". At the same time error no. 10 will be indicated on the actual "speed" display. When the rotor is stationary, open the lid of the centrifuge and let the temperature in the rotor chamber cool down to +30°C. Then re-start the centrifuge.
Should the same failure occur again, please call our service.

7. Service and Maintenance

7.1 Service and inspection of the centrifuge

Centrifuge service and inspection should be done regularly and only by authorized and qualified personnel. **Use only original spare parts!**

7.2 Maintenance and Cleaning

Maintenance
The maintenance of the centrifuge involves essentially keeping the rotor chamber, the rotor and the accessories clean. Please pay special attention to anodized aluminium parts. Breakage of rotors can be caused even by slight damages. In case of rotor, buckets or tube racks contacting corrosive liquids, the respective spots and parts have to be cleaned carefully.
Corrosive liquids are for example:

- alkaline soup-solution
- alkaline amino
- strong acids
- solutions containg heavy metals
- waterfree and chlorinated solvents
- salt solutions e.g. sea-water

Cleaning:

The purpose of a thorough cleaning is, beside hygienic reasons, the avoidance of corrosion by soiling. In order to avoid damage to anodized parts such as rotors, reduction plates etc., only neutral cleaning agents with a ph-value 6-8 should be used.
Never use an alkaline cleaning agents (ph > 8). After cleaning please ensure that all parts are dried thoroughly by hand or in a warm-air-cabinet (max. temperature +50°C).

It is recommended that all anodized aluminum parts are regularly treated with anti-corrosion oil, so their durability will be increased and the corrosion risk reduced.

With humidity and non hermetically closed samples, condensation may form. The condensation should be removed regulary with a cloth from the rotor chamber. Turn the centrifuge off when it is not being used. Allow the chamber to reach room temperature, and dry out the chamber with a cloth.

7.3 Cleaning the centrifuge after breakage of glass tubes/glass bottles

With high g-values, there is a possibility that tube breakage will occur. Should this happen, the centrifuge, rotor, buckets, adapters and the rotor chamber must be thoroughly cleaned and all broken particles removed immediately.
If this is not done, they could scratch the protective coating of the rotor.
If the rotor chamber has not been properly cleaned, this will produce a fine black dust which can cause significant damage to the centrifuge chamber, rotor, buckets and the samples.

7.4 Disinfection

If, for example due to tube breakage, infectious material is spilled into the centrifuge, the rotor, rotor chamber, buckets etc. should be disinfected !!!
Rotor and rotor chamber should then be treated with a neutral disinfection agent, (ie a 10% bleach solution). A disinfectant spray should be used to thoroughly clean the chamber, rotor, buckets, tube racks etc..

Rotor and swing out buckets can be autoclaved. Note: rubber parts can eventually wear in time with repeated autoclaving. Replace rubber parts if they become brittle, and treat the metal parts with an anti-corrosion oil (ie. 3 in 1 oil or WD40) each time after autoclaving.

8. Breakdown

8.1 Emergency lid release

In case of power failure or any malfunction, the lid can be opened manually in order to protect your samples.
Please proceed as follows:

- Switch off the centrifuge and unplug the power cord.
- Remove the plastic plug on the left side of the centrifuge housing
- Loosen the nut behind the plastic plug by with the tool for removing the rotor provided to you.
  Turn the tool counter-clock wise till it stops.
  Attention: Please turn smooth till it stops!
- Now you have to open the lid and remove the samples
- Close the lid, and turn the tool clockwise till it stops.
- Switch on the centrifuge and wait approx. 10 seconds until you start the unit again.

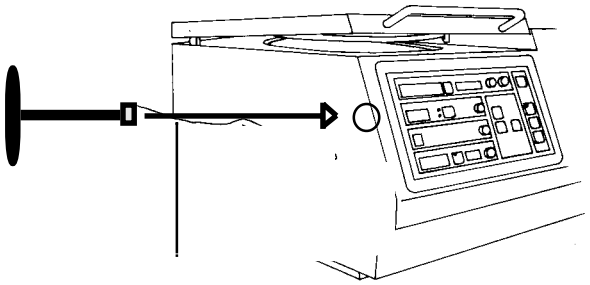

Note: Do Not turn power switch off while lid mechanism is "operating" i.e. (opening or closing, while in motion). This can be detrimental to the lid mechanism and the centrifuge!

8.2 Check list / Trouble shooting

The error message will be indicated by a certain number on the digital speed display. At the same time "ERROR" appears on the preset display.

There is a distinction between two different kinds of errors. The digits on the "speed" display have the following meaning:

Error no. 1 - 49 (Forced stop)
If one of those errors occurs, the rotor will brake from the preset speed to 0. As soon as the rotor has stopped, the error message can be reset by opening and closing the centrifuge lid.

Error no. 50 - 99 (Emergency stop)
If this occurs, the frequency converter will be switched off. This means that the rotor will be stopped brakeless. The error message can only be reset by switching the main switch on and off.

If the unit stops due to an error indication you should restart the unit to check if the error occurs again.

The error numbers which are not listed in this chapter are not in use at the time of publication and they are reserved for future use in widening the error recognition program.

Error no.: 1 Imbalance

Reason:	*Incorrect loading of the rotor*
Action:	Balance your samples

Reason:	*Incorrect adjustment of the imbalance switch*
Action:	Imbalance switch has to be readjusted (call service)

Error no.: 2 Permanent imbalance signal

Reason:	*Position of the imbalance switch not correct*
Action:	Imbalance switch has to be readjusted (call service)

Reason:	*Imbalance switch is defective*
Action:	Imbalance switch has to be replaced (call service)

Error no.: 10 Overtemperature in the rotor chamber (more than +50°C)

Reason:	*Breakdown of the refrigeration system*
Action:	Wait till the temperature is below 30°C. Restart the unit. If the temperature in the rotor chamber reaches again 50°C, call service

Reason:	*Temperature sensor defective*
Action:	Call service

Error no.: 11 Temperature sensor

Reason:	*Short circuit at the temperature sensor or at the sensor cable*
Action:	Call service

Reason:	*Chamber temperature is too low, below - 25°C*
Action:	Solenoid valve is not working. Call service

Error no.: 20 No rotor identification

Reason:	*No rotor inserted*
Action:	Insert rotor into the unit

Reason:	*Rotor identification sensor defective*
Action:	Call service

Reason:	*Inserted rotor has no indicator ring*
Action:	Use a correct rotor

Reason:	*Rotor is not fixed correctly to the motor shaft*
Action:	Insert rotor correctly. The pins have to align correctly with the rotor slots (see chapter 3)

Error no.: 21 Start Bit is missing

Reason:	*A magnet of the indicator ring is missing*
Action:	Check indicator ring and call service

Error no.: 22 Rotor is not mentioned in the rotor chart

Reason:	*Rotor is not authorized for this unit*
Action:	Insert only rotors authorized for this unit

Error no.: 25 Power failure

Reason:	*Power failure while rotor is in motion*
Action:	Open and reclose the lid, restart the centrifuge

Error no.: 30 Radius correction

Reason:	*Radius correction value too big*
Action:	Adjust the radius correction to the correct value

Error no.: 36 Relay for the frequency converter cannot be released

Reason:	*Defect on the power board*
Action:	Call service

Error no.:50,51 Memory failure

Reason:	*Internal or external memory failure*
Action:	Restart the unit, if the failure occurs again, call service

Error no.: 55 Overspeed

Reason:	*Overspeed sensor or engine speed sensor defective*
Action:	Call service

Error no.: 60 Engine speed sensor signal is missing

Reason:	*Engine speed sensor defective or parting of a cable at the sensor*
Action:	Call service

Error no.: 70 Interface of the frequency converter

Reason:	*Communication of controller, power board, interface cable and frequency converter is not working*
Action:	Call service

Error no.: 82-83 Cutoff power board - frequency converter

Reason:	*Overcurrent or undervoltage due to power supply fluctuations*
Action:	Restart the unit, take care that the power supply is stable

Error no.: 84 Overtemperature at the driving

Reason:	*Temperature of the converter or motor too high*
Action:	Switch off the centrifuge. Wait for about 15 min. and switch the unit on again

Error no.: 85 to 87 Failures

Reason:	*Internal defect*
Action:	Call service

Error no.: 90 Emergency lid release

Reason:	*The centrifuge lid has been opened by the emergency lid release during the run.*
Action:	Close centrifuge lid. Danger of accident!

Reason:	*Control switch of the lid lock is defective*
Action:	Call service

Error no.: 94 Voltage loss during run

Reason:	*The power supply is below tolerance for a short moment*
Action:	Wait till standstill of the rotor. Open centrifuge lid after the yellow LED "lid" is lit. Switch off and on the main switch.